ISSN 2395-1621

Investigation of Performance of Plastic Worm Gear in Power Window Gearbox Application

#1J. B. Mahakal, #2 D. N. Kamble

1jaya.tambe@gmail.com
2dnkamble81@gmail.com,

#12Dept. Of Mechanical Engg. Sinhagad Academy of Engineering, Pune 411048

ABSTRACT

Gears are essential machine elements designed to transmit motion and power from one mechanical unit to another. Various types of gear have been developed to perform different functions. Power window or electric window lifts are automobile windows which can be raised and lowered by depressing a button or switch, as opposed to using a hand-turned crank handle contents.

The Worm gears are normally made of plastic materials for cost cutting and weight reduction purpose. Gears can fail in many different ways as load on gears increases the failure of gears occurs at certain load. This paper focuses on performance of worm gear with Delrin & Nylon-66 materials used for power window gear box motors. A series of analysis is performed including Theoretical analysis, Software analysis (FEA) using ANSYS, where as experimental validation of results using actual testing of gear box by test rig. The performance characteristics are obtained by graph for torque Vs speed, power Vs speed and efficiency Vs speed for 20MnCr5 as worm material where as DELRIN & Nylon as worm gear material.

ARTICLE INFO

Article History

Received :18th November 2015

Received in revised form :

19th November 2015

Accepted : 21st November , 2015

Published online :

22nd November 2015

***Keywords*— Power Window, Worm gears, Delrin and Nylon 66.**

I. INTRODUCTION

Worm gears are widely used as a power transmitting gears between two non intersecting shafts where low power requirement is necessary. This paper represents the performance of plastic worm gear for power window application. Power windows or electric windows lifts are automobile window which can be raised and lowered by depressing a button or switch, as opposed to using a hand-turned crank handle contents. Power windows usually inoperable when the car is not running. This is primarily a security feature. It would be a simple thing to allow electric power windows to be operable when the ignition is turned off, however it would also make the car much easier to steal. As a compromise, some systems offer the compromise of leaving power applied to the windows until a passenger door is opened at which time the window power is removed.

Generally gears are made of metallic materials but now a days advanced polymers are developed. In power window, gear is used of polymer materials which have sufficient strength and properties similar to metallic materials. Polymer materials Delrin, Nylon is used. [1]. polymer give extra benefits like less noise- vibration, low cost, less maintenance and lubrication and easy manufacturing [2]. Polymers gears were injection molding into symmetric and asymmetric gears[3]. For investigating the bending fatigue failure by finite element analysis a series of analysis is performed it includes macroscopical inspection, geometrical examination, fault tree analysis is performed by finite element analysis [4].The coated gears showed the best overall contact fatigue performance [5]. The load sharing of a steel plastic gear pair changes dramatically compared to the conventional theory of steel gears. The change in load sharing also changes the stresses. The root stresses in principle independent of the modulus, become quite different for plastic gears due to changes in load sharing [7]. Structural polymers like Nylon and Delrin are used for manufacturing gears through injection molding. Polymers have low strength and modulus, better tribological properties and poor thermal resistance

compared to metals, therefore machine parts made of polymer base materials behave unlike metals during service [9].

II. LAYOUT AND CONSTRUCTION OF POWER WINDOW

Figure 2.1 shows the layout of test rig used in power window application.

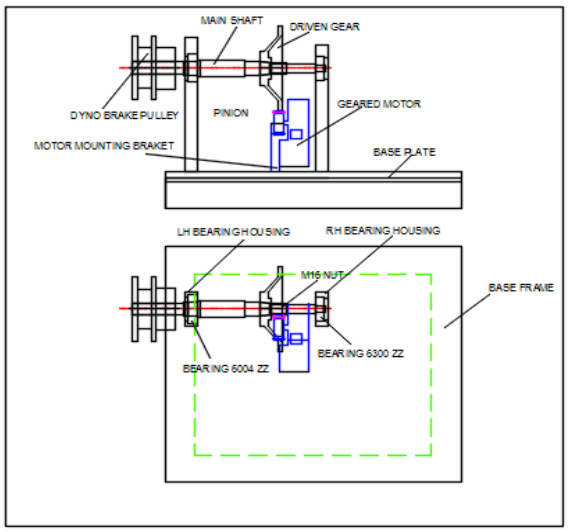

Fig. 2.1 Layout of test rig

The test rig comprises of the geared motor mounted on motor mounting bracket onto the base plate. As the motor is bolted it can be removed and the alternative gear of Nylon-66 and Delrin can be interchanged for the purpose of trial. The geared motor carries a driver pinion that drives the driven gear mounted on the main shaft. The main shaft is held in ball bearings 6004zz and 6300zz namely held in the LH and RH bearing housings.

The main shaft carries the driven gear at the centre held onto the shaft by means of an M16 nut where as the other end of the shaft carries the dyno-brake pulley. The function of the dyno brake pulley is to carry the load at the time of testing.

III. WORKING OF POWER WINDOW

In power windows pushing the button up or down, the windows move. It all begins with the car battery that sends the power to the power distribution box, from there the power is directed to the ignition; so that when the vehicle is turn on the windows will be in operation.

The power window motor is a small motor that has an attached worm gear. This worm gear is a length of metal with a spiral on one end, similar to that of a screw. The worm is attached to a gear; this circular gear has teeth around the outside. As the worm turns it moves the gear by linking the teeth inside the spiral; the gear is then linked to several spur gears. Spur gears are used to create gear reductions in machines with motors. The worm is fixed at a specific angle to the gear, which allows the worm to turn the gear, but prevents the gear from turning the worm. The motion of the worm and gears create a gear reduction which gives enough force to turn or rotate things, this is called torque. There are supporting bars below each electric window and attached to each bar is an arm. This arm slides along the bars as the window rises and falls. The other end of the arm has a plate with teeth that slot into the teeth of the gears; as the gears turn so does the arm and in turn raises or lowers the window glass.

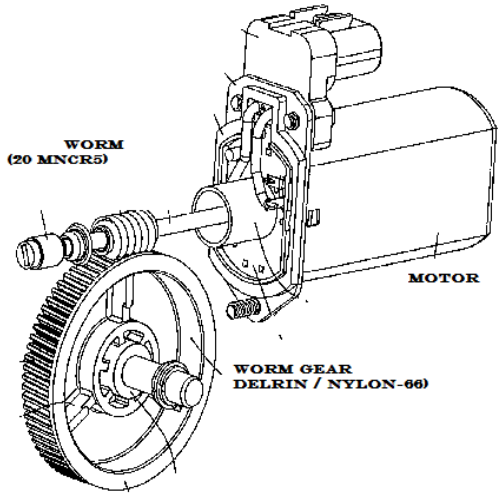

Fig. 3.1 Proposed Model

IV. NUMERICAL MODELING OF THE PROBLEM

a A pair of worm gears is specified and designated by four quantities in the following manner:

z1/z2/q/m

Where,

z1 = Number of starts on the worm.

z2 = Number of teeth on the worm wheel

q = Diametric quotient = $q = \frac{d_1}{m}$

m = Module

Where, d1 is the pitch circle diameter of the worm.

The pair of worm and worm wheel used in the machine is designated as 1/55/10/1

The worm is made of case hardened steel 14C6 where as the worm wheel is made of Delrin and Nylon-66.

$F = 2m\sqrt{q+1} = 6.63$ (1)

$Lr = \{ Da1 + 2C\} \sin\text{-}1[F / (Da1 + 2C)]$ (2)

$Mt_1 = 17.65\ Xb_1\ Sb_1\ m\ Lr\ D_2 \cos U$ (3)

$Mt_2 = 17.65\ Xb_2\ Sb_2\ m\ Lr\ D_2 \cos U$ (4)

Lewis Strength equation

$W_T = S_b\ Y\ m$ (5)

$T_d = \frac{\pi}{16} \times fs_{act} \times (D^4 - d^4)/ D$ (6)

$fs_{act} = \frac{16 \times T_d}{\pi \times (D^4 - d^4)/ D}$ (7)

Shaft bearing will be subjected to purely medium radial loads hence used ball bearings for this application. Selecting Single Row deep groove ball bearing.

$P = X F_r + Y F_a$ (8)

V. RESULTS BY FEA ANALYSIS

i) Solid Modeling : Solid modeling is a representation of a real physical object without missing any properties of the

real physical object and that would be for design and analysis purpose.

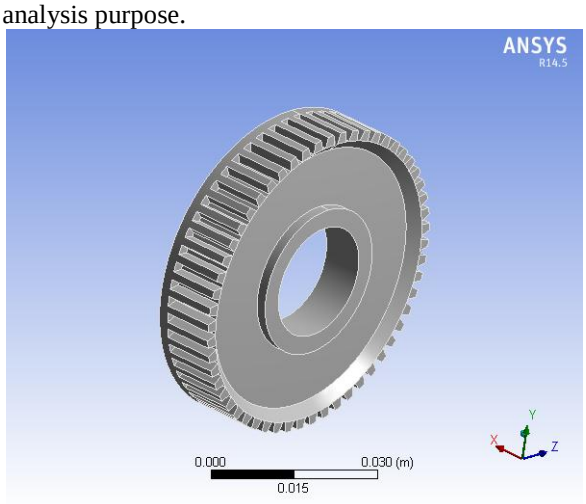

Fig. 5.1 Gear model

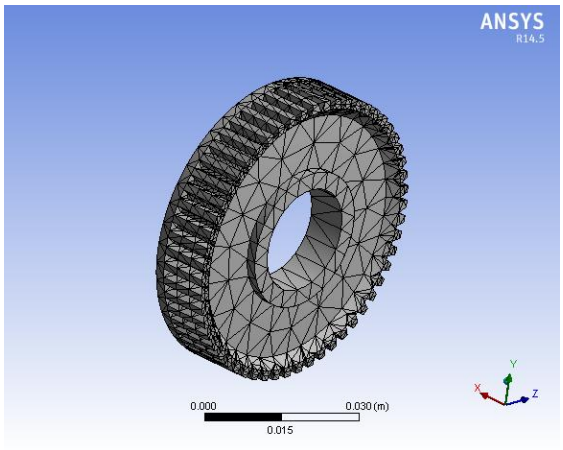

Fig. 5.2 Meshing of a Gear

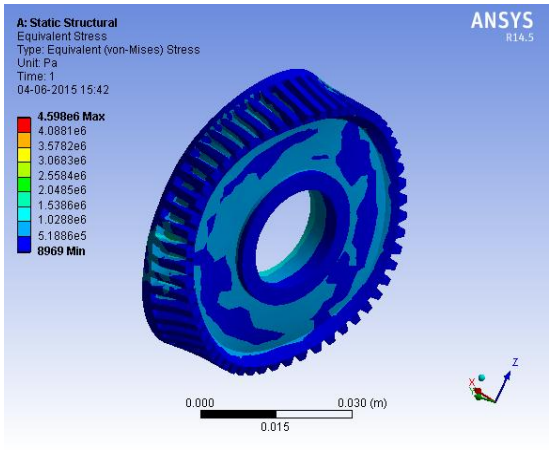

Fig. 5.3 Von mises stress

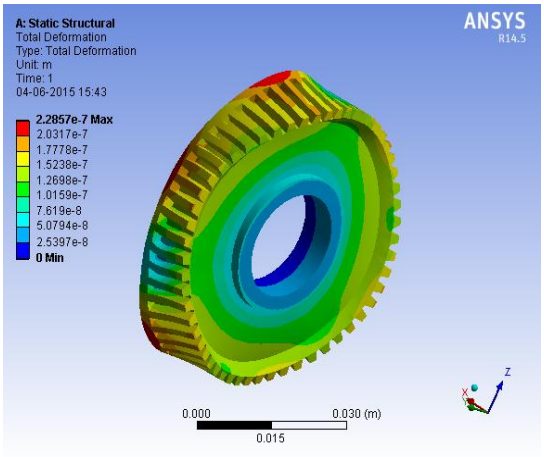

Fig. 5.4 Deformation of Gear

VI. RESULTS

Torque Vs Speed Characteristics.

For taking the trial on worm wheel to conduct trial, an dynobrake pulley cord, weight pan are provided on the output shaft. As shown in fig. 5.1 as the torque increases the speed decreases.

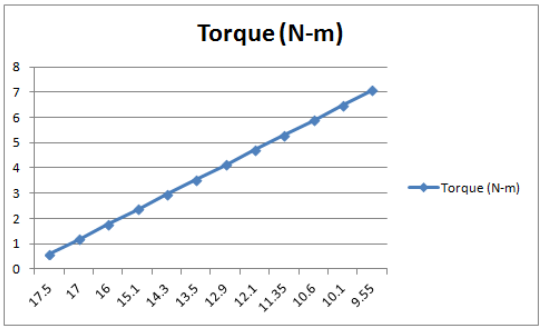

Fig. 5.1 Torque Vs Speed

VII. CONCLUSION

1. Nylon-66 gears with maximum power transmistted upto 7.773 watt .

2. Nylo gears show better power transmission efficiency that is considered excellent in case of self locking worm gears.

3. Stalling torque of the nylon-66 gear is lower than the stalling torque of motor, hence where maximum safety is considered as thereby ensuiring maximum child safety.

REFERENCES

[1] N. Anand Mohan, S. Senthilvelan ⋆, “Preliminary bending fatigue performance evaluation of asymmetric composite gears”, Mechanism and Machine Theory 78 (2014) 92–104.

[2] Zhang Dayi, Liu Shuguo, Liu Baolong, Hong Jie*, “Investigation on bending fatigue failure of a micro-gear through finite element analysis”, Engineering Failure Analysis 31 (2013) 225–235.

[3] Wenbin Dong a,⇑, Yihan Xing, Torgeir Moan, Zhen Gao , “Time domain-based gear contact fatigue analysis of a

wind turbine drivetrain under dynamic conditions", International Journal of Fatigue 48 (2013) 133–146.
[4] V. Moorthy∗, B.A. Shaw, "Contact fatigue performance of helical gears with surface coatings", Wear 276– 277 (2012) 130– 140.
[5] T.Osman,Ph.Velex, "A model for the simulation of the interactions between dynamic tooth loads and contact fatigue in spur gears", Tribology International 46 (2012) 84–96.
[6] Prof. Dr.-Ing. Bernd-Robert Höhn, Dr.-Ing. Peter Oster and Dr.-Ing. Christo Braykoff, " Size and Material Influence on the
Tooth Root, Pitting, Scuffing and Wear Load-Carrying Capacity of Fine-Module Gears", (2011).
[7] Osman Asi *, "Fatigue failure of a helical gear in a gearbox", Engineering Failure Analysis 13 (2006) 1116–1125.
[8] J. Kramberger *, M. Sˇraml, S. Glodezˇ, J. Flasˇker, I. Potrc,